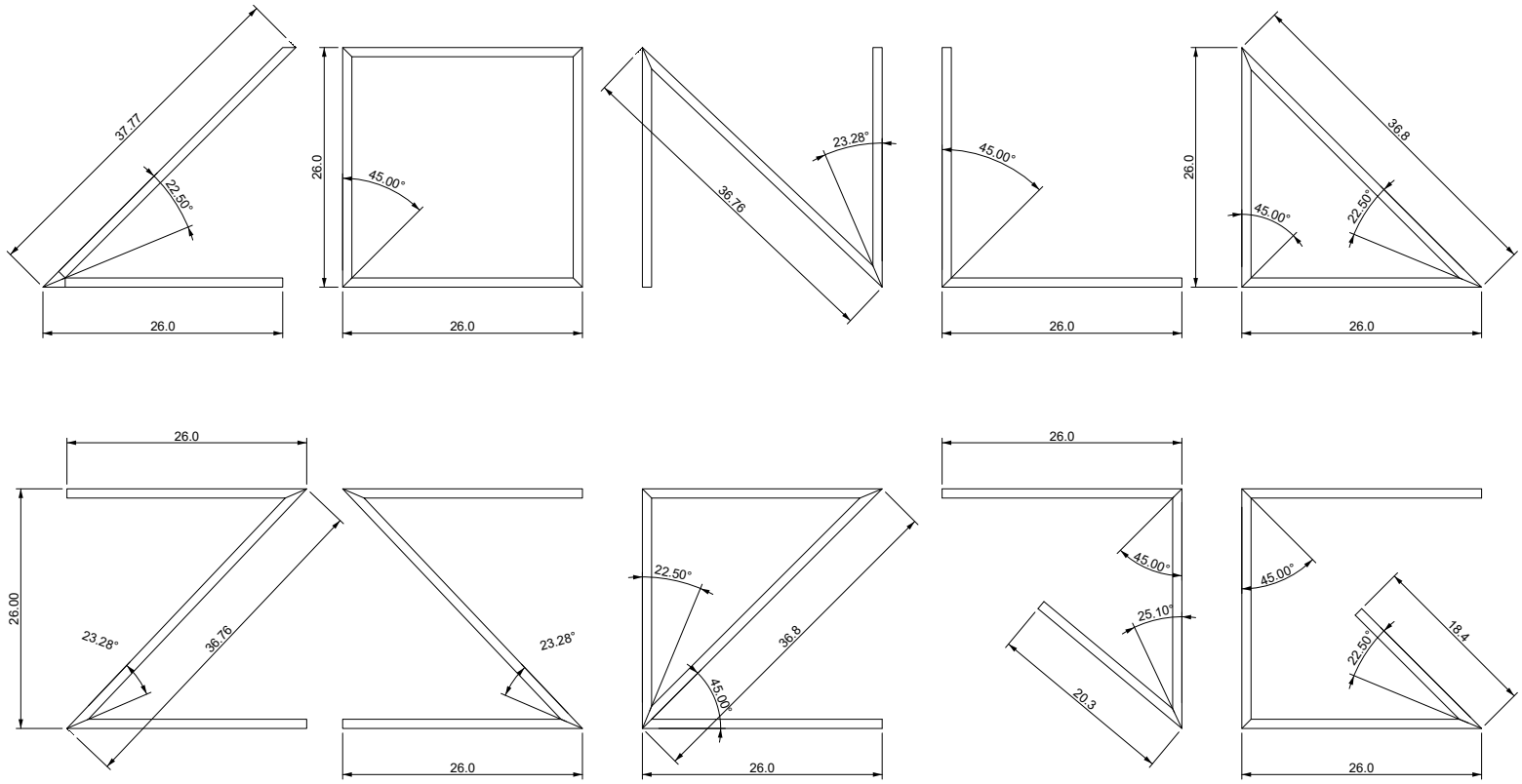
37.77
22.50°
26.0
26.0
45.00°
26.0
36.76
23.28°
45.00°
26.0
26.0
36.8
45.00°
22.50°
26.0
26.0
26.0
26.00
23.28°
36.76
26.0
23.28°
26.0
22.50°
36.8
45.00°
26.0
26.0
45.00°
25.10°
20.3
45.00°
18.4
22.50°
26.0